KLUDI LOGO

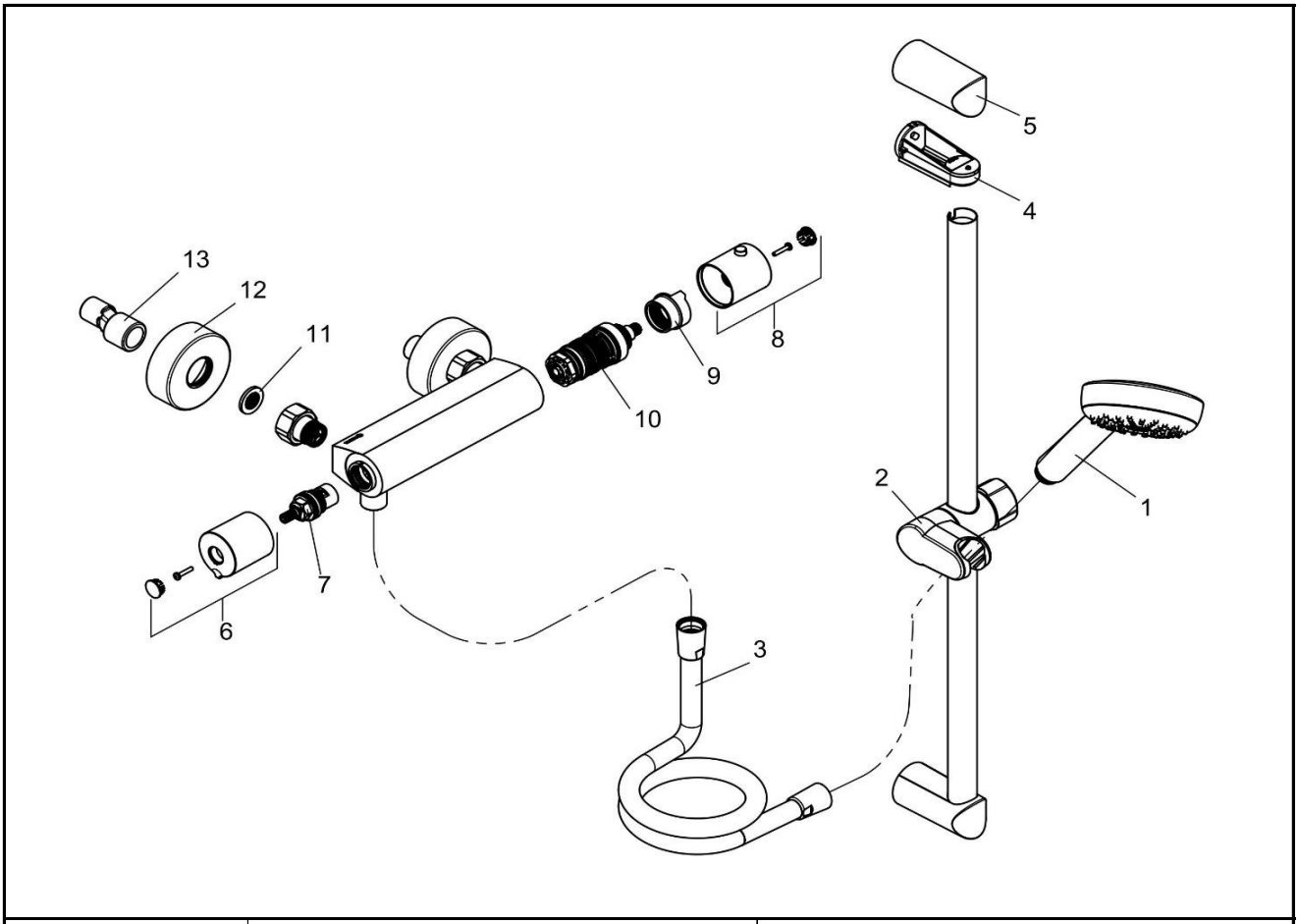

6857505-00		Shower Duo	Shower Duo
1	6810005-00	HANDBRAUSE	HANDSHOWER
2	7486905-00	GLEITSCHIEBER	SLIDING SPOOL
3	6105605-00	BRAUSESCHLAUCH	SHOWER HOSE
4	83031405-00	WANDHALTER	WALLHOOK
5	93079705-00	GEHÄUSE	BODY
6	7654805-00	ABSPERRGRIFF	SHUT - OFF HANDLE
7	7643600-00	KERAMIK - OBERTEIL	CERAMIC HEAD PART
8	7369605-00	THERMOSTATGRIFF	HANDLE FOR THERMOSTAT
9	7369700-00	JUSTIERBUCHSE	SLEEVE FOR ADJUSTMENT
10	7643000-00	THERMOSTAT	TEMPERATURE CONTROL UNIT
11	95502535-00	SCHMUTZFANGSIEB F. THERMOSTAT	FILTER FOR THERMOSTAT MIXER
12	7369505-00	UP - ROSETTE	ESCUTCHEON, CONCEALED
13	7655204-00	S - ANSCHLUSS	S - CONNECTIONS