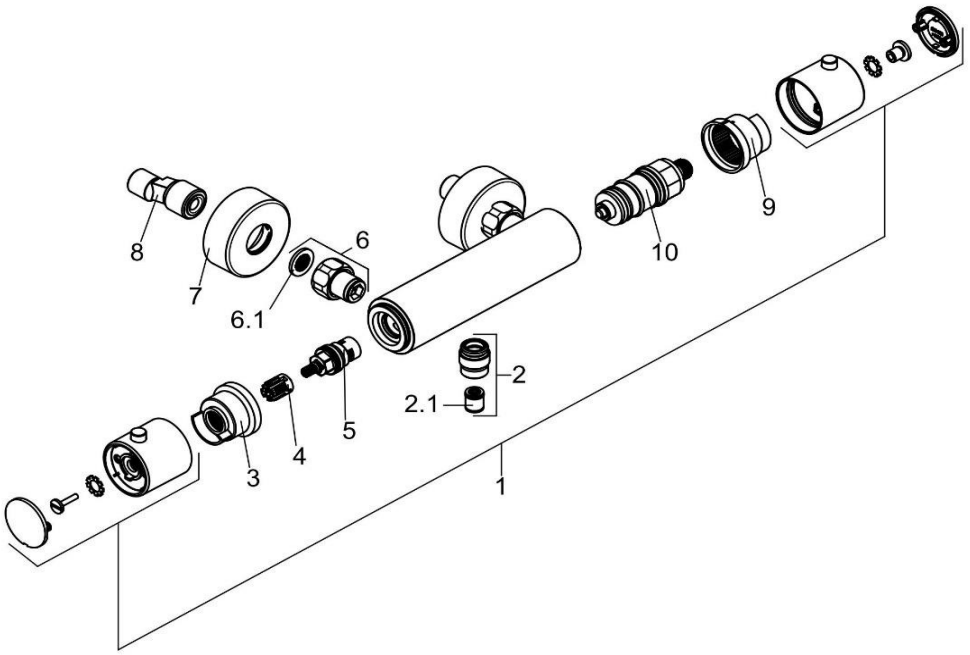

ab 04/09

352000538		Thermostat Brausearmatur DN 15	thermostatic shower mixer DN 15
1	7488005-00	GRIFF - SET OBJEKTA THERM	HANDLE SET OBJEKTA THERM
2	7578005-00	BRAUSEANSCHLUSSNIPPEL	SHOWER CONNECTING NIPPLE
2.1	7510600-00	RÜCKFLUSSVERHINDERER	BACK FLOW PREVENTER
3	93019806-00	JUSTIERBUCHSE	SLEEVE FOR ADJUSTMENT
4	93045000-00	GRIFFBEFESTIGUNG	HANDLE MOUNTING
5	7878700-00	KERAMIK - OBERTEIL	CERAMIC HEAD PART
6	7449505-00	WANDARMATURENANSCHLUSS	WALL CONNECTING NIPPLE
6.1	95502535-00	SCHMUTZFANGSIEB F. THERMOSTAT	FILTER FOR THERMOSTAT MIXER
7	7469805-00	ROSETTE	ESCUTCHEON
8	7655100-00	S - ANSCHLUSS	S - CONNECTIONS
9	93091406-00	JUSTIERBUCHSE	SLEEVE FOR ADJUSTMENT
10	7639000-00	THERMOSTAT	TEMPERATURE CONTROL UNIT

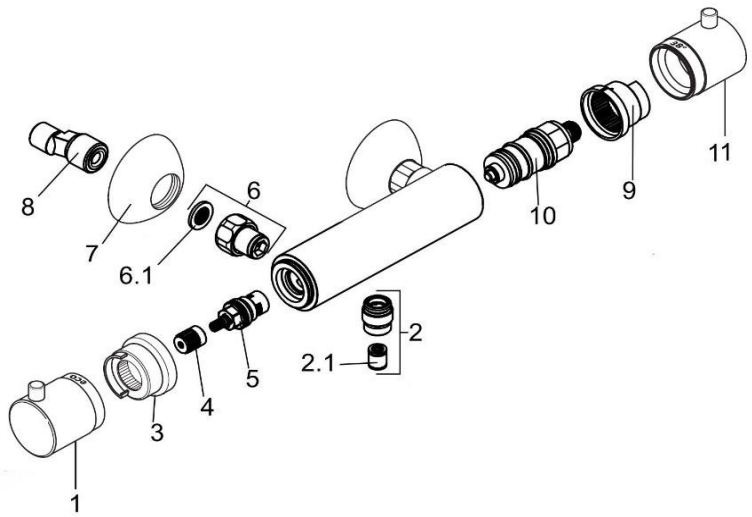

bis 03/09

352000538		Thermostat Brausearmatur DN 15	thermostatic shower mixer DN 15
1	7676805-00	THERMOSTATGRIFF	HANDLE FOR THERMOSTAT
2	7578005-00	BRAUSEANSCHLUSSNIPPEL	SHOWER CONNECTING NIPPLE
2.1	7510600-00	RÜCKFLUSSVERHINDERER	BACK FLOW PREVENTER
3	93019806-00	JUSTIERBUCHSE	SLEEVE FOR ADJUSTMENT
4	93006611-00	GRIFFBEFESTIGUNG	HANDLE MOUNTING
5	7564100-00	KERAMIK - OBERTEIL	CERAMIC HEAD PART
6	7449505-00	WANDARMATURENANSCHLUSS	WALL CONNECTING NIPPLE
6.1	95502535-00	SCHMUTZFANGSIEB F. THERMOSTAT	FILTER FOR THERMOSTAT MIXER
7	7664805-00	ROSETTE	ESCUTCHEON
8	7655204-00	S - ANSCHLUSS	S - CONNECTIONS
9	93009306-00	JUSTIERBUCHSE	SLEEVE FOR ADJUSTMENT
10	7672900-00	THERMOSTAT	TEMPERATURE CONTROL UNIT
11	7676905-00	THERMOSTATGRIFF	HANDLE FOR THERMOSTAT