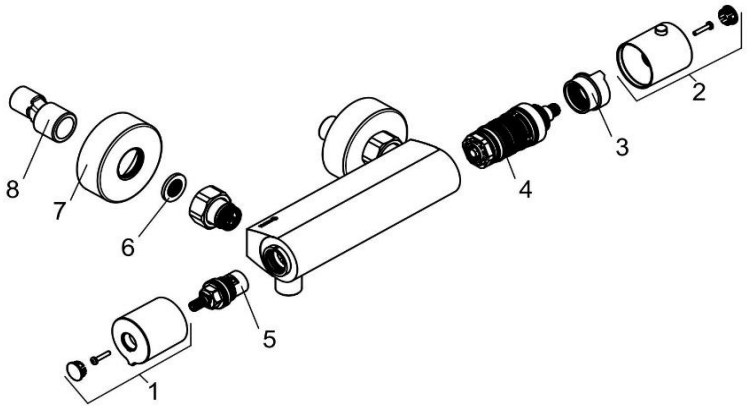

350020538		Thermostat Brausearmatur DN 15	thermostatic shower mixer DN 15
1	7654805-00	ABSPERRGRIFF	SHUT - OFF HANDLE
2	7369605-00	THERMOSTATGRIFF	HANDLE FOR THERMOSTAT
3	7369700-00	JUSTIERBUCHSE	SLEEVE FOR ADJUSTMENT
4	7643000-00	THERMOSTAT	TEMPERATURE CONTROL UNIT
5	7643600-00	KERAMIK - OBERTEIL	CERAMIC HEAD PART
6	95502535-00	SCHMUTZFANGSIEB F. THERMOSTAT	FILTER FOR THERMOSTAT MIXER
7	7369505-00	UP - ROSETTE	ESCUTCHEON, CONCEALED
8	7655100-00	S - ANSCHLUSS	S - CONNECTIONS