GROHE

ENJOY WATER®
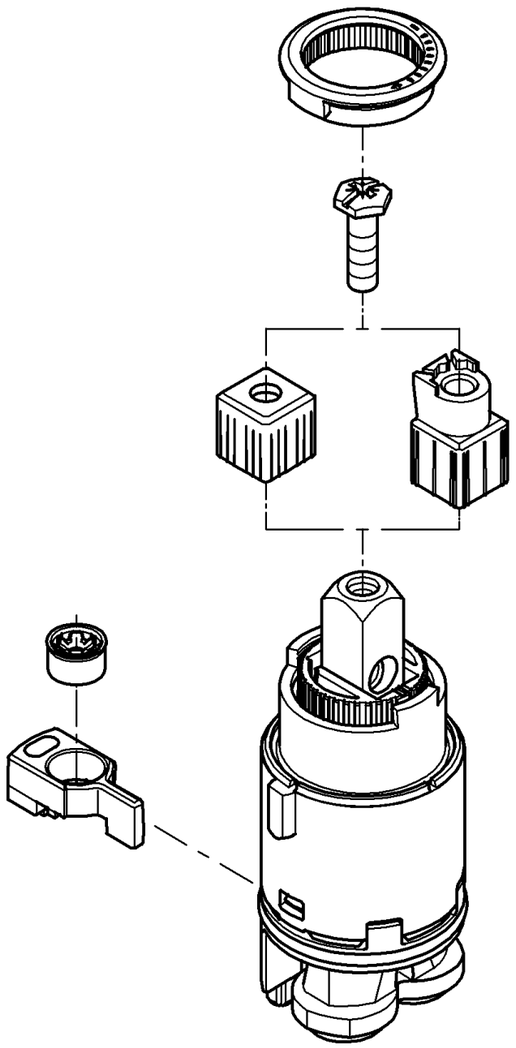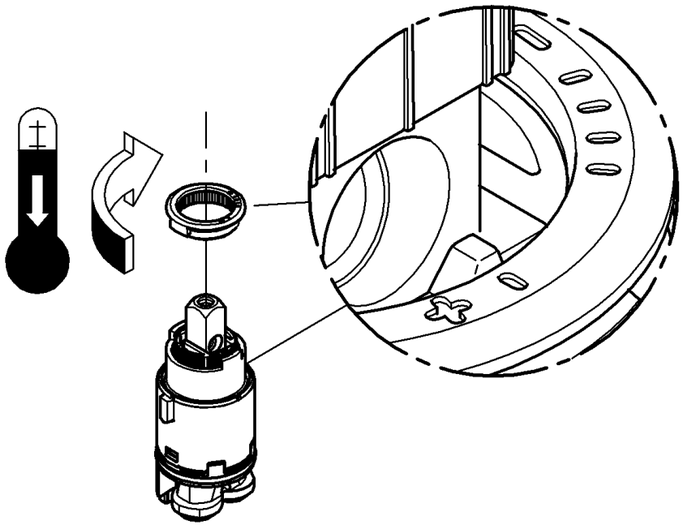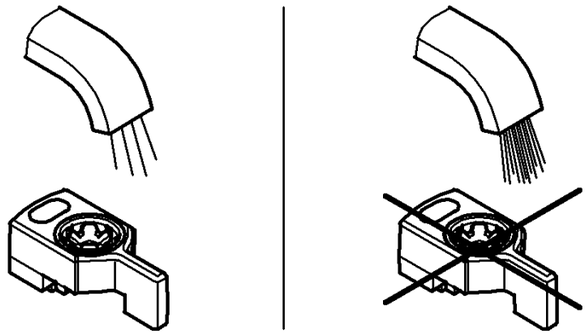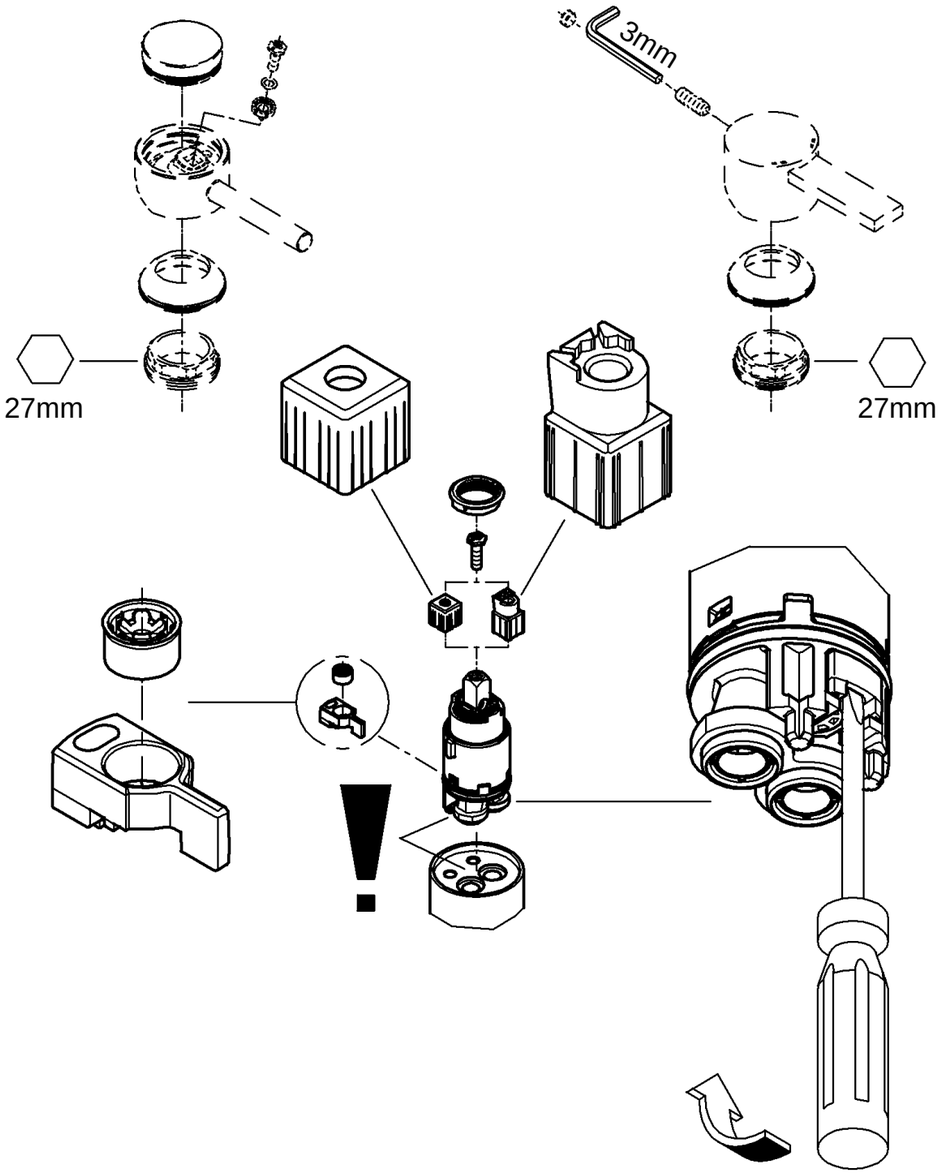
46 580