PROPRIETARY AND CONFIDENTIAL
THE INFORMATION CONTAINED IN THIS DRAWING IS THE SOLE PROPERTY OF MUSCLE MACHINE AB.
ANY REPRODUCTION IN PART OR AS A WHOLE WITHOUT THE WRITTEN PERMISSION OF MUSCLE MACHINE AB IS PROHIBITED.

Rev	Design Change Note	Author	Date
001	First issue same as 6010460511xx	ZP	2014-02-28

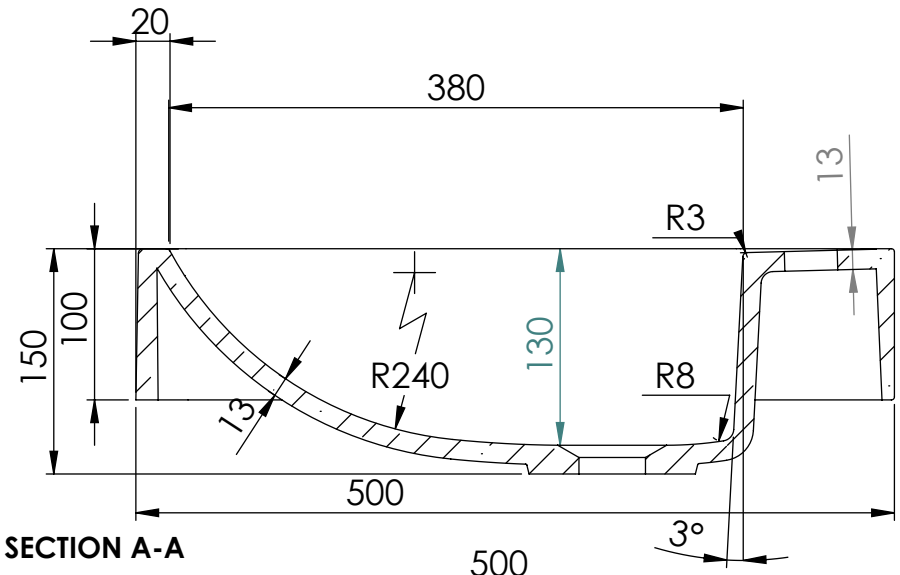

SECTION A-A

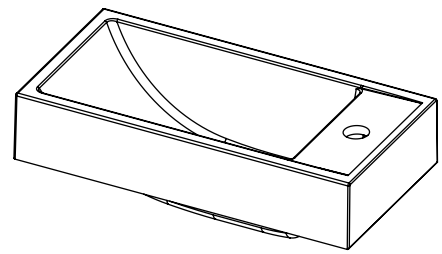

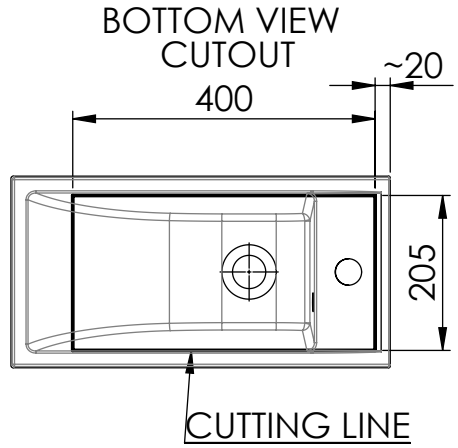

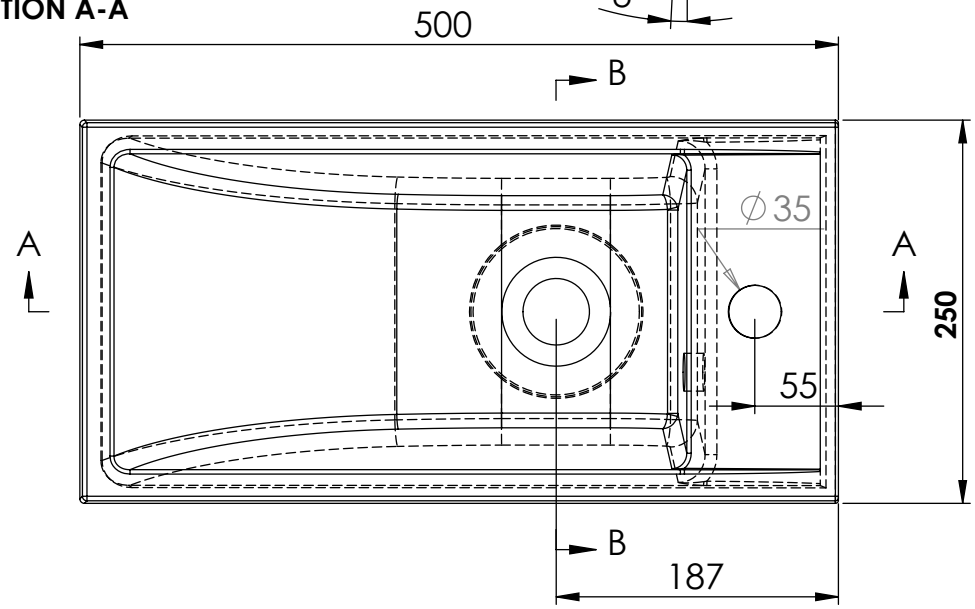

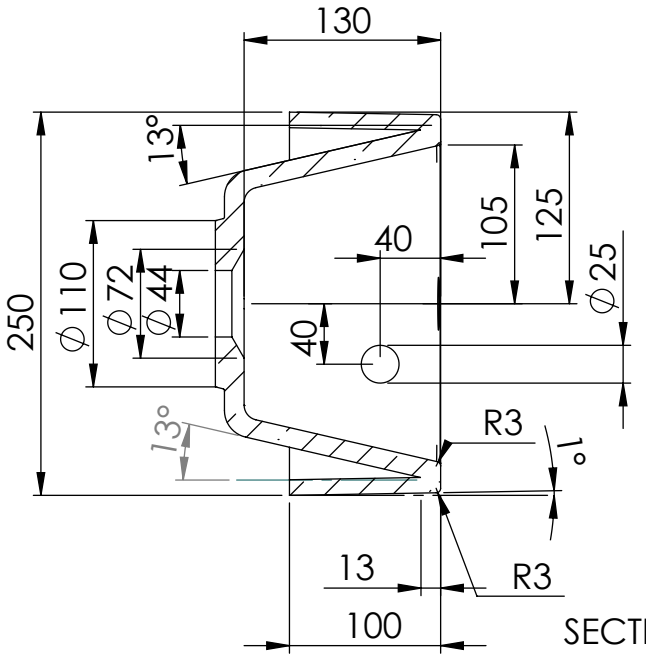

SECTION B-B

Tolerance total	length	+3/0 mm
	width	+2/0 mm
	height	+2/-2 mm
Tol. height side walls	≤25 mm	+1/-1 mm
	>25 mm	+2/-2 mm
Tolerance holes location		+2/-2 mm
Tolerance holes diameter		+1/-1 mm
Tolerance plane bending		+1,5/-1,5 mm

DALLE	DR	081218		WS W&S	500c
			MARTINA 500 c **6235210511xx** **500 x 250**		**1:9**