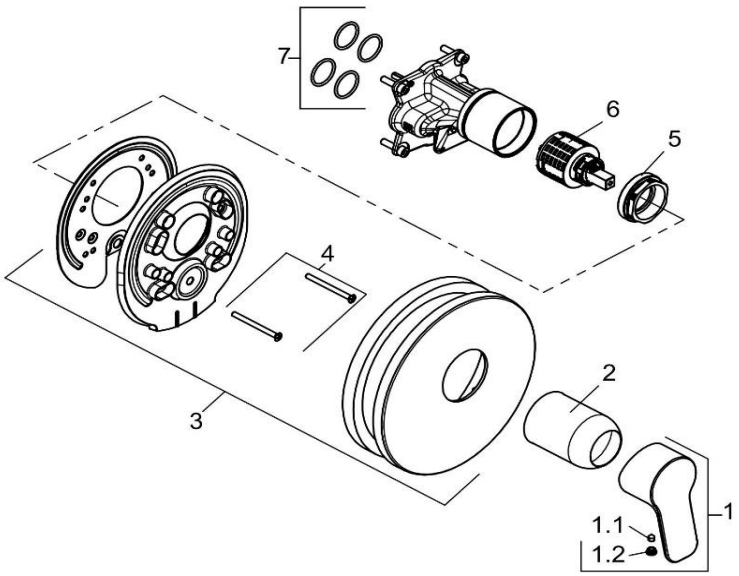


| 376550565 | | Unterputz-Brause-Einhandmischer | concealed single lever shower mixer |
|---|---|---|---|
| 1 | 7361805-00 | HEBEL PURE & EASY | LEVER PURE & EASY |
| 1.1 | 92204601-00 | GEWINDESTIFT | GRUB SCREW |
| 1.2 | 93019759-00 | STOPFEN | PLUG |
| 2 | 92059105-00 | ABDECKHÜLSE | COVER SLEEVE |
| 3 | 7470305-00 | UP - ROSETTE | ESCUTCHEON, CONCEALED |
| 4 | 7446335-00 | SCHRAUBEN SET | SCREW SET |
| 5 | 92266837-00 | SPANNSCHRAUBE | FASTENING SCREW |
| 6 | 7685600-00 | STEUEREINHEIT | CERAMIC CARTRIDGE |
| 7 | 7301100-00 | DICHTUNGSSATZ | SEALING SET |
| | | | |
| | | | |
| | | | |
| | | | |
| | | | |
| | | | |
| | | | |
| | | | |
| | | | |
| | | | |
| | | | |
| | | | |
| | | | |