Rev	Design Change Note	Author	Date
001	First issue	KW	2017-01-24

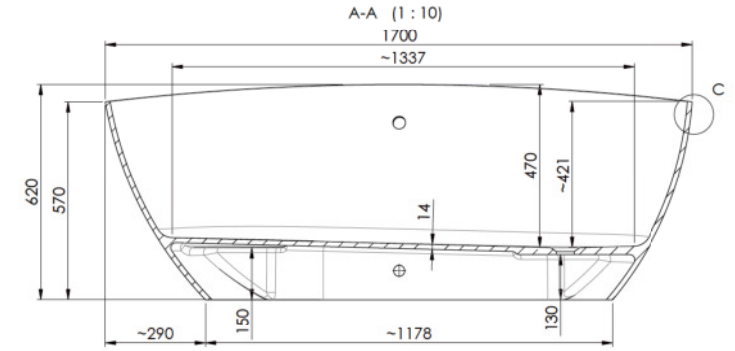

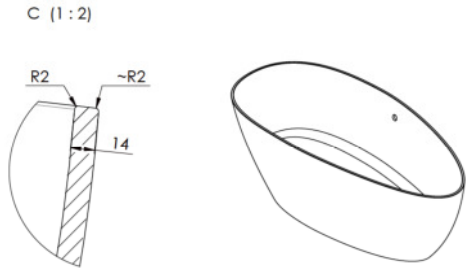

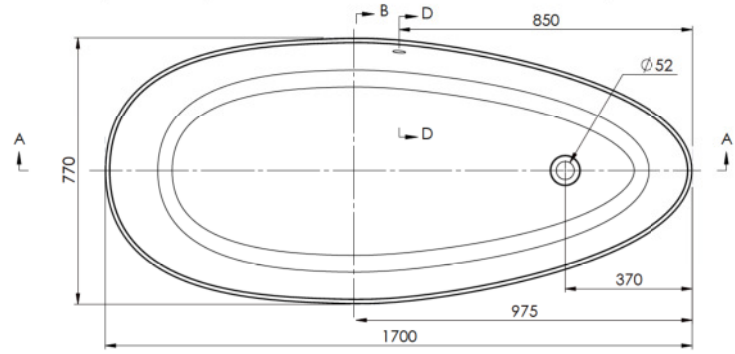

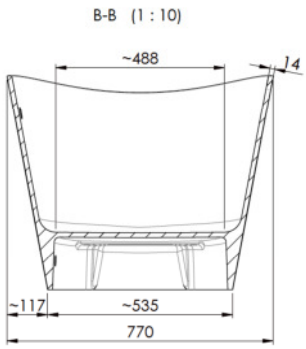

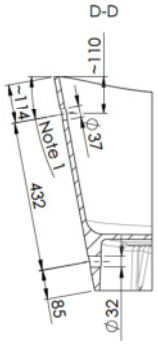

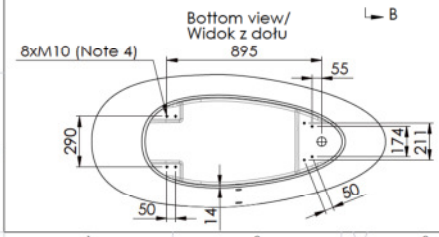

Uwagi/Note:
1. Normal to the wall of bath / prostopadle do ścianki wanny
2. Water volume(full bathtub) 330 l / objętość wody(pełna wanna) 330 l
3. Water volume (to overflow) 250 l / objętość wody (do przelwu) 250 l
4. M10 steel bearings/M10 metalowe kołki

Tolerance length/width/height		+10/-10 mm
Tol. plane bending	≤800 mm	+1,5/-1,5 mm
	>800 mm	+3/-3 mm
Tolerance holes location		+3/-3 mm
Tolerance holes diameter		+1/-1 mm
Tolerance wall thickness		+1/-1 mm
Tolerance feet location		+5/-5 mm

Drawn by	Created Date	Checked by
Zbigniew P	2013-08-28	Krzysztof N

Project status	Client
Approved	WS WEINMANN

Art. Name: RITA XL 1700L
Art. No: 6235411731xx
Mould No: F1180171
Customer ID: 3603

Material volume[mm³]	Overflow	Taphole	Main dimensions L x W / H [mm]	Drain
47936564	Yes	0	1700 x 770 / 620	Regular

Surface area[mm²]	Sheet Size	Scale	Current revision
5519059	A3	1:10	001

This document must not be copied without our written permission, and the contents thereof must not be imparted to a third party nor used for any purpose unauthorised by us. Contraventions will be prosecuted.